AMIGO

AMIGO | NKI 95/26

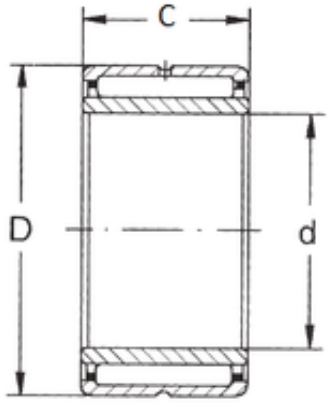

Bearing No. NKI 95/26

D	125 mm
d	95 mm
B	26 mm
C	26 mm
Weight	0,816 Kg
Size (mm)	95x125x26
Width (mm)	26
Bearing number	NKI 95/26
Bore Diameter (mm)	95
Outer Diameter (mm)	125
(Grease) Lubrication Speed	2500 r/min
Basic dynamic load rating (C)	76,5 kN
Basic static load rating (C0)	147 kN