AMIGO

AMIGO| NKI 90/36

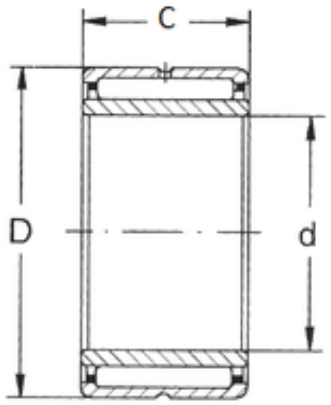

Bearing No. NKI 90/36

D	120 mm
d	90 mm
B	36 mm
C	36 mm
Weight	1,09 Kg
Size (mm)	90x120x36
Width (mm)	36
Bearing number	NKI 90/36
Bore Diameter (mm)	90
Outer Diameter (mm)	120
(Grease) Lubrication Speed	2700 r/min
Basic dynamic load rating (C)	107 kN
Basic static load rating (C0)	223 kN