AMIGO

AMIGO | NKI 90/26

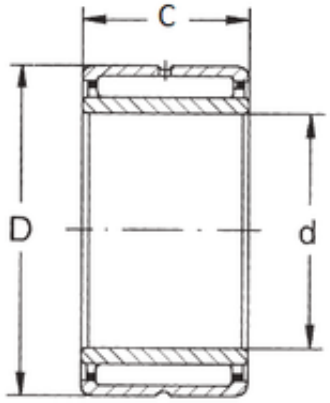

Bearing No. NKI 90/26

D	120 mm
d	90 mm
B	26 mm
C	26 mm
Weight	0,778 Kg
Size (mm)	90x120x26
Width (mm)	26
Bearing number	NKI 90/26
Bore Diameter (mm)	90
Outer Diameter (mm)	120
(Grease) Lubrication Speed	2700 r/min
Basic dynamic load rating (C)	73 kN
Basic static load rating (C0)	137 kN