AMIGO

AMIGO | NKI 85/36

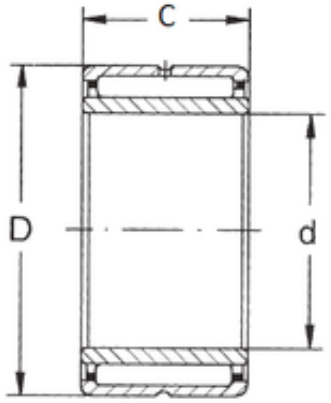

Bearing No. NKI 85/36

D	115 mm
d	85 mm
B	36 mm
C	36 mm
Weight	1,04 Kg
Size (mm)	85x115x36
Width (mm)	36
Bearing number	NKI 85/36
Bore Diameter (mm)	85
Outer Diameter (mm)	115
(Grease) Lubrication Speed	2800 r/min
Basic dynamic load rating (C)	108 kN
Basic static load rating (C0)	223 kN