AMIGO

AMIGO | NKI 85/26

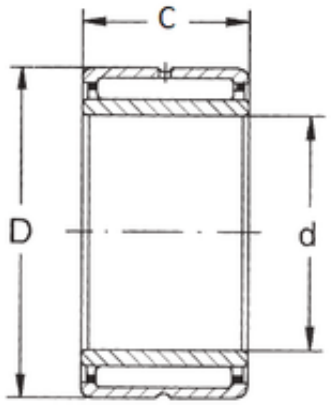

Bearing No. NKI 85/26

D	115 mm
d	85 mm
B	26 mm
C	26 mm
Weight	0,743 Kg
Size (mm)	85x115x26
Width (mm)	26
Bearing number	NKI 85/26
Bore Diameter (mm)	85
Outer Diameter (mm)	115
(Grease) Lubrication Speed	2800 r/min
Basic dynamic load rating (C)	74,5 kN
Basic static load rating (C0)	137 kN