AMIGO

AMIGO | NKI 80/35

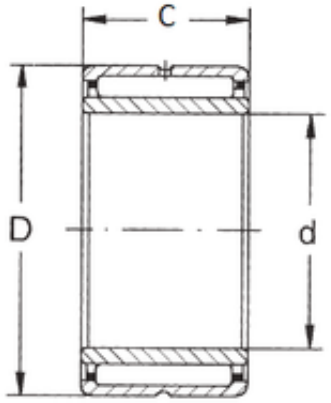

Bearing No. NKI 80/35

D	110 mm
d	80 mm
B	35 mm
C	35 mm
Weight	0,959 Kg
Size (mm)	80x110x35
Width (mm)	35
Bearing number	NKI 80/35
Bore Diameter (mm)	80
Outer Diameter (mm)	110
(Grease) Lubrication Speed	2900 r/min
Basic dynamic load rating (C)	104 kN
Basic static load rating (C0)	208 kN