AMIGO

AMIGO | NKI 80/25

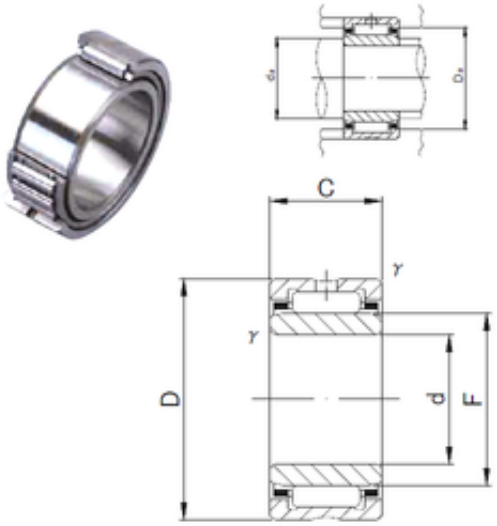

Bearing No. NKI 80/25

B	25 mm
d	80 mm
F	90 mm
D	110 mm
C	25 mm
da max	88 mm
Weight	0,71 Kg
r min.	1 mm
Da max.	105 mm
da min.	85 mm
Size (mm)	80x110x25
Width (mm)	25
Bearing number	NKI 80/25
Bore Diameter (mm)	80
Outer Diameter (mm)	110
Basic dynamic load rating (C)	77,4 kN
Basic static load rating (C0)	150 kN