AMIGO

AMIGO | NKI 75/35

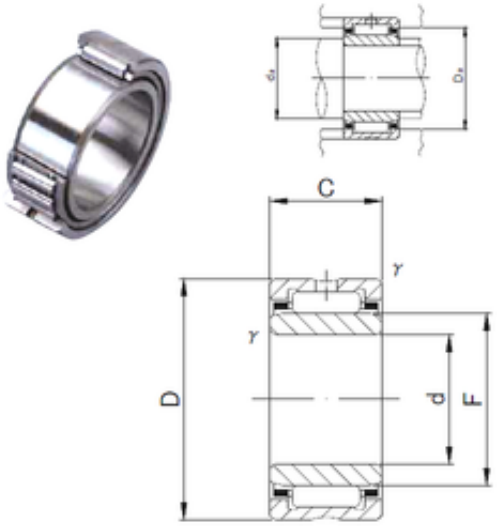

Bearing No. NKI 75/35

B	35 mm
d	75 mm
F	85 mm
D	105 mm
C	35 mm
da max	83 mm
Weight	0,945 Kg
r min.	1 mm
Da max.	100 mm
da min.	80 mm
Size (mm)	75x105x35
Width (mm)	35
Bearing number	NKI 75/35
Bore Diameter (mm)	75
Outer Diameter (mm)	105
Basic dynamic load rating (C)	102 kN
Basic static load rating (C0)	209,9 kN