AMIGO

AMIGO | NKI 75/25

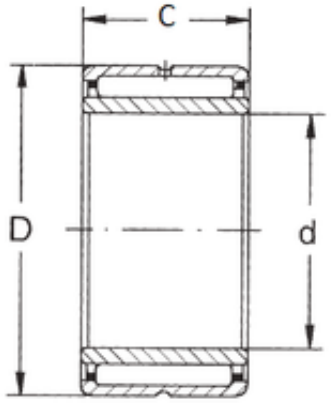

Bearing No. NKI 75/25

D	105 mm
d	75 mm
B	25 mm
C	25 mm
Weight	0,641 Kg
Size (mm)	75x105x25
Width (mm)	25
Bearing number	NKI 75/25
Bore Diameter (mm)	75
Outer Diameter (mm)	105
(Grease) Lubrication Speed	3100 r/min
Basic dynamic load rating (C)	
Basic static load rating (C0)	123 kN