AMIGO

AMIGO| NKI 70/35

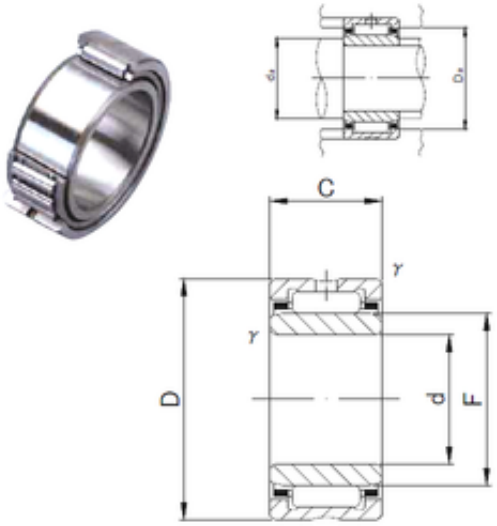

Bearing No. NKI 70/35

B	35 mm
d	70 mm
F	80 mm
D	95 mm
C	35 mm
da max	78 mm
Weight	0,755 Kg
r min.	1 mm
Da max.	90 mm
da min.	75 mm
Size (mm)	70x95x35
Width (mm)	35
Bearing number	NKI 70/35
Bore Diameter (mm)	70
Outer Diameter (mm)	95
Basic dynamic load rating (C)	78,1 kN
Basic static load rating (C0)	194,2 kN