AMIGO

AMIGO | NKI 70/25

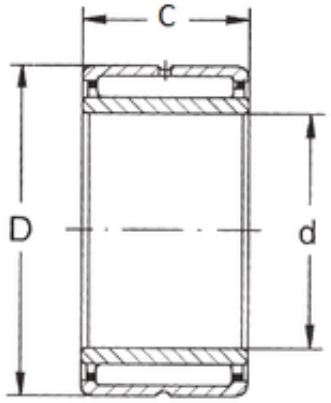

Bearing No. NKI 70/25

D	95 mm
d	70 mm
B	25 mm
C	25 mm
Weight	0,521 Kg
Size (mm)	70x95x25
Width (mm)	25
Bearing number	NKI 70/25
Bore Diameter (mm)	70
Outer Diameter (mm)	95
(Grease) Lubrication Speed	3300 r/min
Basic dynamic load rating (C)	57 kN
Basic static load rating (C0)	119 kN