AMIGO

AMIGO | NKI 65/25

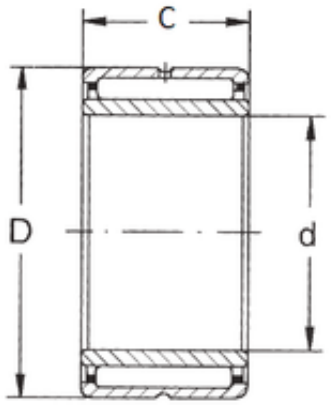

Bearing No. NKI 65/25

D	90 mm
d	65 mm
B	25 mm
C	25 mm
Weight	0,467 Kg
Size (mm)	65x90x25
Width (mm)	25
Bearing number	NKI 65/25
Bore Diameter (mm)	65
Outer Diameter (mm)	90
(Grease) Lubrication Speed	3700 r/min
Basic dynamic load rating (C)	54 kN
Basic static load rating (C0)	100 kN