AMIGO

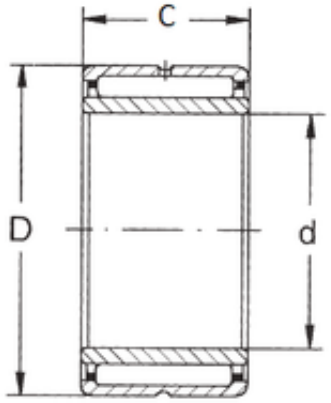

Bearing No. NKI 60/35

D	82 mm
d	60 mm
B	35 mm
C	35 mm
Weight	0,553 Kg
Size (mm)	60x82x35
Width (mm)	35
Bearing number	NKI 60/35
Bore Diameter (mm)	60
Outer Diameter (mm)	82
(Grease) Lubrication Speed	4000 r/min
Basic dynamic load rating (C)	63 kN
Basic static load rating (C0)	139 kN