AMIGO

AMIGO | NKI 60/25

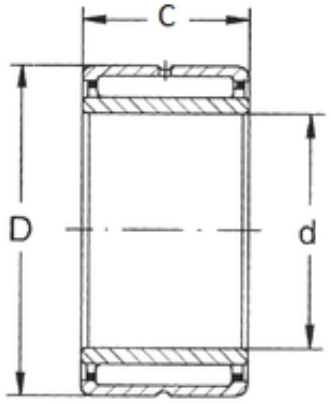

Bearing No. NKI 60/25

D	82 mm
d	60 mm
B	25 mm
C	25 mm
Weight	0,394 Kg
Size (mm)	60x82x25
Width (mm)	25
Bearing number	NKI 60/25
Bore Diameter (mm)	60
Outer Diameter (mm)	82
(Grease) Lubrication Speed	4000 r/min
Basic dynamic load rating (C)	44,5 kN
Basic static load rating (C0)	89 kN