AMIGO

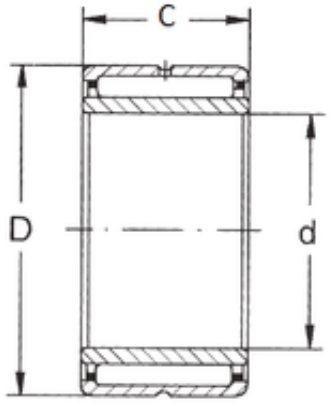

Bearing No. NKI 55/25

D	72 mm
d	55 mm
B	25 mm
C	25 mm
Weight	0,271 Kg
Size (mm)	55x72x25
Width (mm)	25
Bearing number	NKI 55/25
Bore Diameter (mm)	55
Outer Diameter (mm)	72
(Grease) Lubrication Speed	4300 r/min
Basic dynamic load rating (C)	41 kN
Basic static load rating (C0)	85 kN