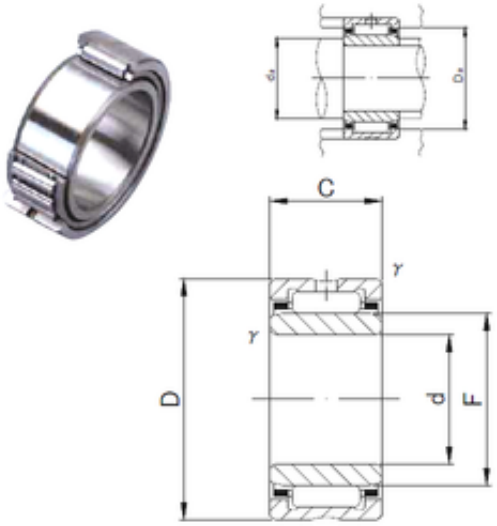

Bearing No. NKI 50/25

B	25 mm
d	50 mm
F	55 mm
D	68 mm
C	25 mm
da max	54,5 mm
Weight	0,27 Kg
r min.	0,6 mm
Da max.	64 mm
da min.	54 mm
Size (mm)	50x68x25
Width (mm)	25
Bearing number	NKI 50/25
Bore Diameter (mm)	50
Outer Diameter (mm)	68
Basic dynamic load rating (C)	45,4 kN
Basic static load rating (C0)	94,1 kN