AMIGO

AMIGO| NKI 45/25

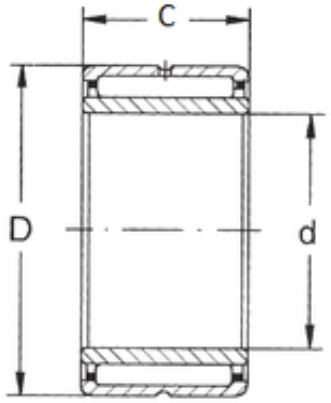

Bearing No. NKI 45/25

D	62 mm
d	45 mm
B	25 mm
C	25 mm
Weight	0,229 Kg
Size (mm)	45x62x25
Width (mm)	25
Bearing number	NKI 45/25
Bore Diameter (mm)	45
Outer Diameter (mm)	62
(Grease) Lubrication Speed	5500 r/min
Basic dynamic load rating (C)	38,5 kN
Basic static load rating (C0)	74,5 kN