AMIGO

AMIGO| NKI 42/30

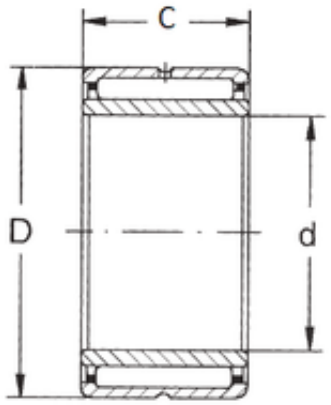

Bearing No. NKI 42/30

D	57 mm
d	42 mm
B	30 mm
C	30 mm
Weight	0,222 Kg
Size (mm)	42x57x30
Width (mm)	30
Bearing number	NKI 42/30
Bore Diameter (mm)	42
Outer Diameter (mm)	57
(Grease) Lubrication Speed	5500 r/min
Basic dynamic load rating (C)	42,5 kN
Basic static load rating (C0)	91,5 kN