AMIGO

AMIGO | NKI 42/20

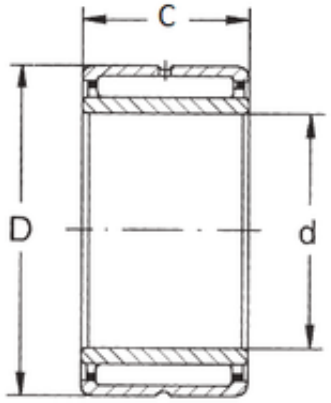

Bearing No. NKI 42/20

D	57 mm
d	42 mm
B	20 mm
C	20 mm
Weight	0,148 Kg
Size (mm)	42x57x20
Width (mm)	20
Bearing number	NKI 42/20
Bore Diameter (mm)	42
Outer Diameter (mm)	57
(Grease) Lubrication Speed	5500 r/min
Basic dynamic load rating (C)	28,8 kN
Basic static load rating (C0)	55,5 kN