AMIGO

AMIGO | NKI 40/30

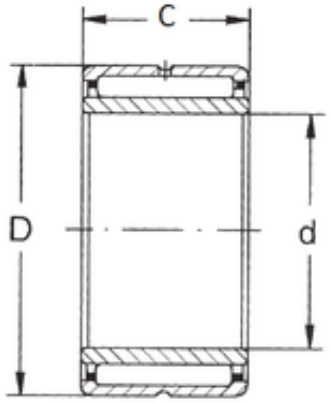

Bearing No. NKI 40/30

D	55 mm
d	40 mm
B	30 mm
C	30 mm
Weight	0,216 Kg
Size (mm)	40x55x30
Width (mm)	30
Bearing number	NKI 40/30
Bore Diameter (mm)	40
Outer Diameter (mm)	55
(Grease) Lubrication Speed	6000 r/min
Basic dynamic load rating (C)	41 kN
Basic static load rating (C0)	85 kN