AMIGO

AMIGO| NKI 40/20

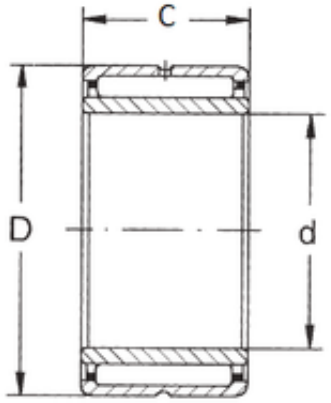

Bearing No. NKI 40/20

D	55 mm
d	40 mm
B	20 mm
C	20 mm
Weight	0,142 Kg
Size (mm)	40x55x20
Width (mm)	20
Bearing number	NKI 40/20
Bore Diameter (mm)	40
Outer Diameter (mm)	55
(Grease) Lubrication Speed	6000 r/min
Basic dynamic load rating (C)	28 kN
Basic static load rating (C0)	52 kN