AMIGO

AMIGO | NKI 100/40

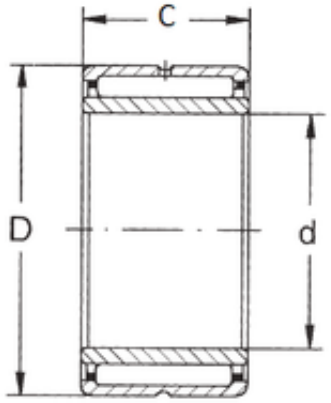

Bearing No. NKI 100/40

D	130 mm
d	100 mm
B	40 mm
C	40 mm
Weight	1,33 Kg
Size (mm)	100x130x40
Width (mm)	40
Bearing number	NKI 100/40
Bore Diameter (mm)	100
Outer Diameter (mm)	130
(Grease) Lubrication Speed	2400 r/min
Basic dynamic load rating (C)	129 kN
Basic static load rating (C0)	290 kN