AMIGO

AMIGO | NKI 35/20

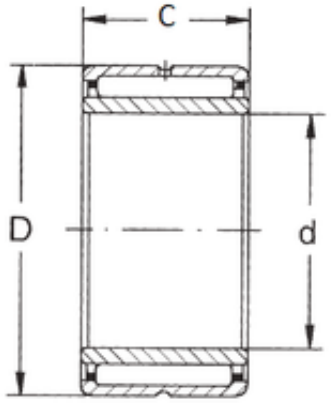

Bearing No. NKI 35/20

D	50 mm
d	35 mm
B	20 mm
C	20 mm
Weight	0,127 Kg
Size (mm)	35x50x20
Width (mm)	20
Bearing number	NKI 35/20
Bore Diameter (mm)	35
Outer Diameter (mm)	50
(Grease) Lubrication Speed	6500 r/min
Basic dynamic load rating (C)	26 kN
Basic static load rating (C0)	47 kN