AMIGO

AMIGO | NKI 30/30

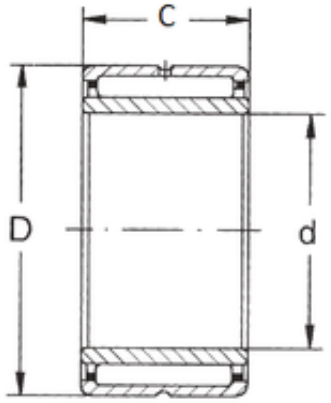

Bearing No. NKI 30/30

D	45 mm
d	30 mm
B	30 mm
C	30 mm
Weight	0,17 Kg
Size (mm)	30x45x30
Width (mm)	30
Bearing number	NKI 30/30
Bore Diameter (mm)	30
Outer Diameter (mm)	45
(Grease) Lubrication Speed	7500 r/min
Basic dynamic load rating (C)	36 kN
Basic static load rating (C0)	66,5 kN