AMIGO

AMIGO | NKI 30/20

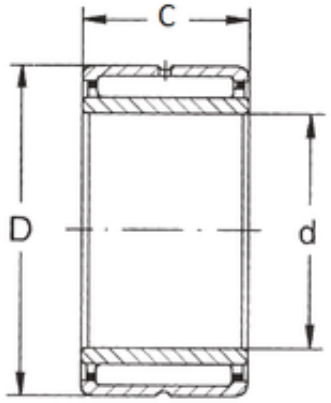

Bearing No. NKI 30/20

D	45 mm
d	30 mm
B	20 mm
C	20 mm
Weight	0,112 Kg
Size (mm)	30x45x20
Width (mm)	20
Bearing number	NKI 30/20
Bore Diameter (mm)	30
Outer Diameter (mm)	45
(Grease) Lubrication Speed	7500 r/min
Basic dynamic load rating (C)	24,8 kN
Basic static load rating (C0)	41,5 kN