AMIGO

AMIGO | NKI 28/20

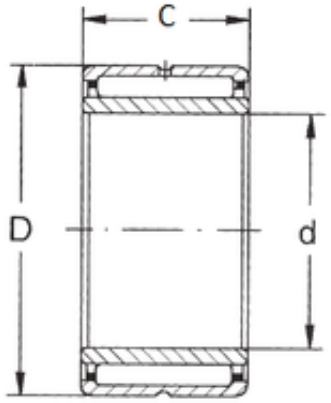

Bearing No. NKI 28/20

D	42 mm
d	28 mm
B	20 mm
C	20 mm
Weight	0,096 Kg
Size (mm)	28x42x20
Width (mm)	20
Bearing number	NKI 28/20
Bore Diameter (mm)	28
Outer Diameter (mm)	42
(Grease) Lubrication Speed	8500 r/min
Basic dynamic load rating (C)	23 kN
Basic static load rating (C0)	37 kN