AMIGO

AMIGO| NKI 25/20

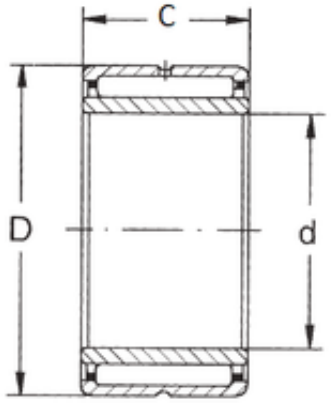

Bearing No. NKI 25/20

D	38 mm
d	25 mm
B	20 mm
C	20 mm
Weight	0,0794 Kg
Size (mm)	25x38x20
Width (mm)	20
Bearing number	NKI 25/20
Bore Diameter (mm)	25
Outer Diameter (mm)	38
(Grease) Lubrication Speed	9500 r/min
Basic dynamic load rating (C)	22 kN
Basic static load rating (C0)	34 kN