Amigo

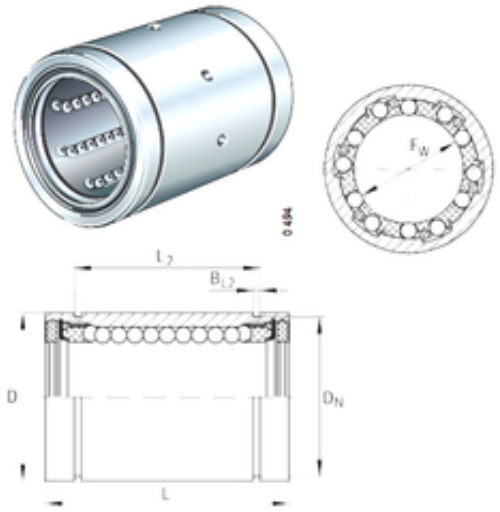

Bearing No. KB25

L	58 mm
D	40 mm
Fw	25 mm
Dn	37,5 mm
L2	43,7 mm
N2	2,5 mm
BL2	1,85 mm
Weight	0,19 Kg
Bearing number	KB25
Bore Diameter (mm)	25
Outer Diameter (mm)	40
Basic dynamic load rating (C)	2,95 kN