Amigo

Amigo | KB16-PP

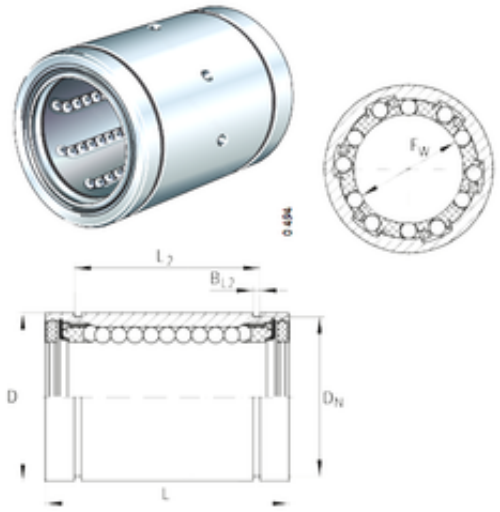

Bearing No. KB16-PP

L	36 mm
D	26 mm
Fw	16 mm
Dn	24,9 mm
L2	24,6 mm
N2	2 mm
BL2	1,3 mm
Weight	0,05 Kg
Bearing number	KB16-PP
Bore Diameter (mm)	16
Outer Diameter (mm)	26
Basic dynamic load rating (C)	0,84 kN