Amigo

Amigo | 29380

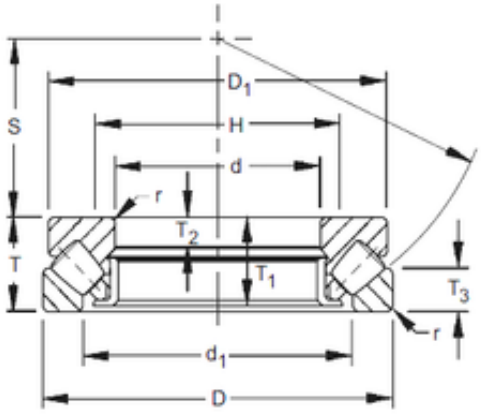

Bearing No. 29380

D	620 mm
d	400 mm
T	132 mm
B	44 mm
C	64 mm
H	500 mm
S	225 mm
T1	127 mm
d1	494 mm
D1	596 mm
r max	5,1 mm
Size (mm)	400x620x132
Width (mm)	132
Bearing number	29380
Bore Diameter (mm)	400
Outer Diameter (mm)	620