AMIGO

AMIGO| NKI 7/16 TN

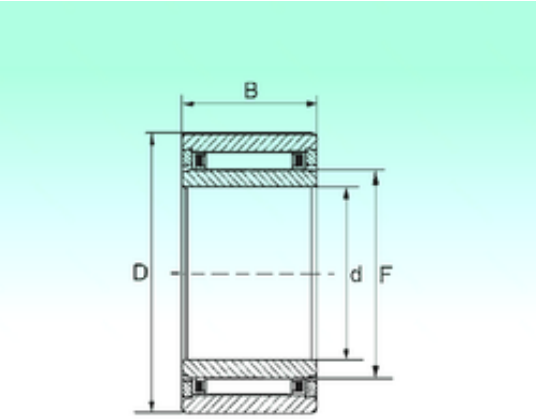

Bearing No. NKI 7/16 TN

d	7 mm
D	17 mm
C	16 mm
Fw	10 mm
Weight	0,0182 Kg
Size (mm)	7x17x16
Width (mm)	16
Bearing number	NKI 7/16 TN
Bore Diameter (mm)	7
Outer Diameter (mm)	17
Basic dynamic load rating (C)	5,9 kN
Basic static load rating (C0)	7,4 kN