AMIGO

AMIGO | NKI 7/12 TN

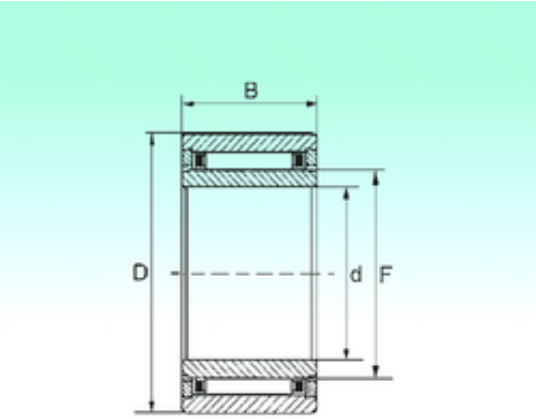

Bearing No. NKI 7/12 TN

d	7 mm
D	17 mm
C	12 mm
Fw	10 mm
Weight	0,0137 Kg
Size (mm)	7x17x12
Width (mm)	12
Bearing number	NKI 7/12 TN
Bore Diameter (mm)	7
Outer Diameter (mm)	17
Basic dynamic load rating (C)	4,5 kN
Basic static load rating (C0)	5,2 kN