AMIGO

AMIGO | NKI 6/16 TN

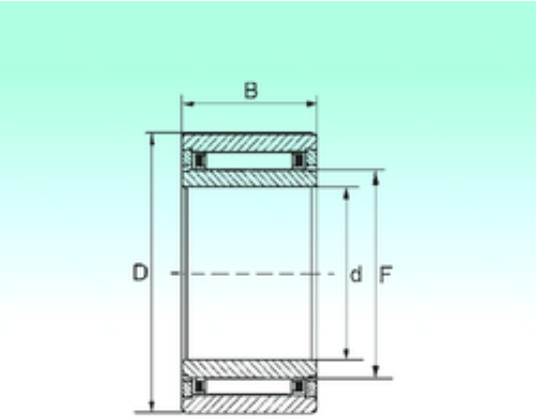

Bearing No. NKI 6/16 TN

d	6 mm
D	16 mm
C	16 mm
Fw	9 mm
Weight	0,0174 Kg
Size (mm)	6x16x16
Width (mm)	16
Bearing number	NKI 6/16 TN
Bore Diameter (mm)	6
Outer Diameter (mm)	16
Basic dynamic load rating (C)	5,6 kN
Basic static load rating (C0)	6,75 kN