AMIGO

AMIGO | NKI 6/12 TN

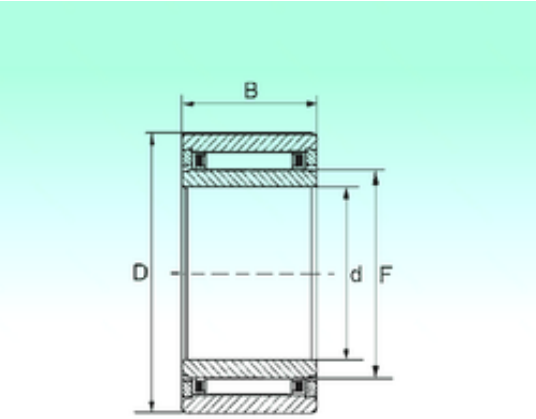

Bearing No. NKI 6/12 TN

d	6 mm
D	16 mm
C	12 mm
Fw	9 mm
Weight	0,0135 Kg
Size (mm)	6x16x12
Width (mm)	12
Bearing number	NKI 6/12 TN
Bore Diameter (mm)	6
Outer Diameter (mm)	16
Basic dynamic load rating (C)	4,27 kN
Basic static load rating (C0)	4,75 kN