AMIGO

AMIGO | NKI 5/16 TN

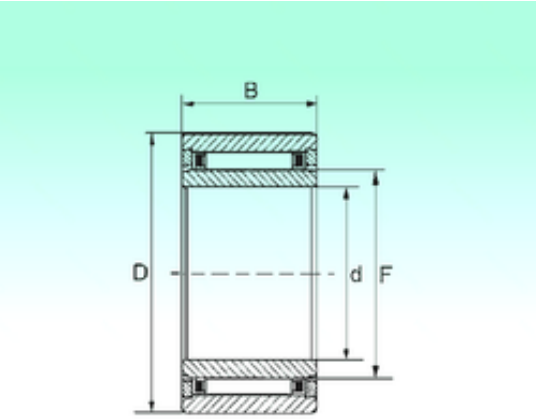

Bearing No. NKI 5/16 TN

d	5 mm
D	15 mm
C	16 mm
Fw	8 mm
Weight	0,0153 Kg
Size (mm)	5x15x16
Width (mm)	16
Bearing number	NKI 5/16 TN
Bore Diameter (mm)	5
Outer Diameter (mm)	15
Basic dynamic load rating (C)	4,9 kN
Basic static load rating (C0)	5,7 kN