AMIGO

AMIGO| NKI 5/12 TN

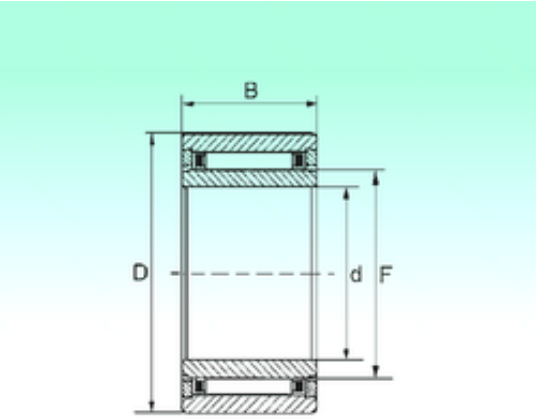

Bearing No. NKI 5/12 TN

d	5 mm
D	15 mm
C	12 mm
Fw	8 mm
Weight	0,0115 Kg
Size (mm)	5x15x12
Width (mm)	12
Bearing number	NKI 5/12 TN
Bore Diameter (mm)	5
Outer Diameter (mm)	15
Basic dynamic load rating (C)	3,75 kN
Basic static load rating (C0)	3,9 kN