AMIGO

AMIGO | NKI 15/16

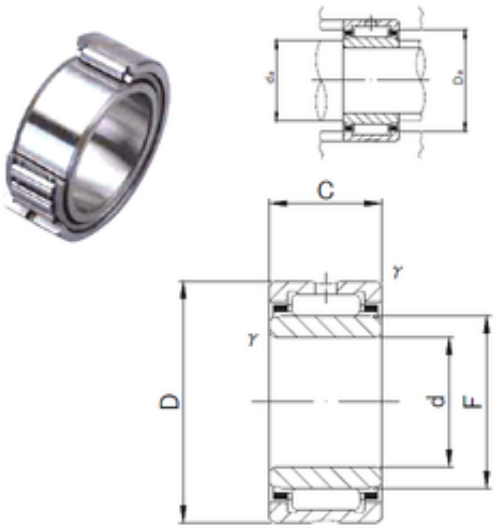

Bearing No. NKI 15/16

B	16 mm
d	15 mm
F	19 mm
D	27 mm
C	16 mm
da max	18 mm
Weight	0,0395 Kg
r min.	0,3 mm
Da max.	25 mm
da min.	17 mm
Size (mm)	15x27x16
Width (mm)	16
Bearing number	NKI 15/16
Bore Diameter (mm)	15
Outer Diameter (mm)	27
Basic dynamic load rating (C)	14 kN
Basic static load rating (C0)	18,7 kN