AMIGO

AMIGO | NKI 12/20

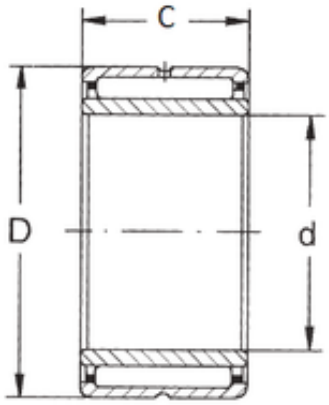

Bearing No. NKI 12/20

D	24 mm
d	12 mm
B	20 mm
C	20 mm
Weight	0,042 Kg
Size (mm)	12x24x20
Width (mm)	20
Bearing number	NKI 12/20
Bore Diameter (mm)	12
Outer Diameter (mm)	24
(Grease) Lubrication Speed	15000 r/min
Basic dynamic load rating (C)	14,6 kN
Basic static load rating (C0)	18,8 kN