AMIGO

AMIGO | NK 9/12 TN

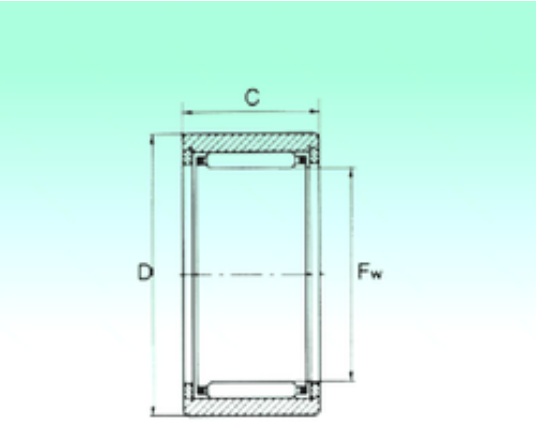

Bearing No. NK 9/12 TN

D	16 mm
C	12 mm
Fw	9 mm
Weight	0,0103 Kg
Size (mm)	9x16x12
Width (mm)	12
Bearing number	NK 9/12 TN
Bore Diameter (mm)	9
Outer Diameter (mm)	16
Basic dynamic load rating (C)	4,28 kN
Basic static load rating (C0)	4,75 kN