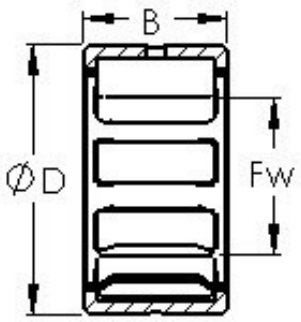

Bearing No. NK8/16TN

Material	52100 Chrome steel, or equivalent
Size (mm)	8x15x16
Width (B)	16.0000
Width (mm)	16
Shaft (Fw)	8.000
Weight (g)	12.00
Bearing Type	Single Row
Outer Dia (D)	15.0000
Bearing number	NK8/16TN
Bore Diameter (mm)	8
Outer Diameter (mm)	15
Dynamic Load Rating (Cr)	5,100
Static Load Rating (Cor)	5,800
Max Speed (Oil) (X1000 RPM)	29,000